REVISION HISTORY					
ECO	ZONE	REV.	DESCRIPTION	DATE	APPR'D

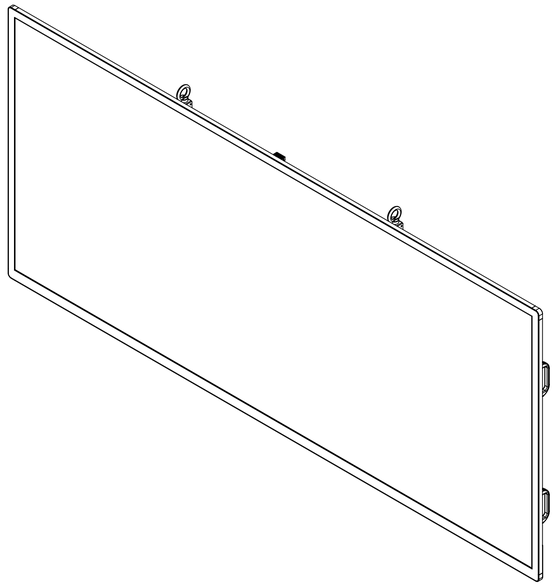

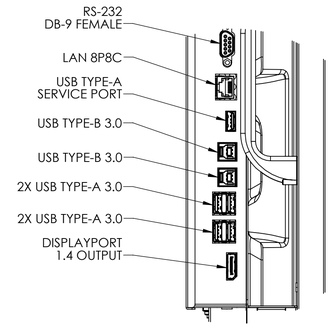

DETAIL A
SCALE 1 : 2

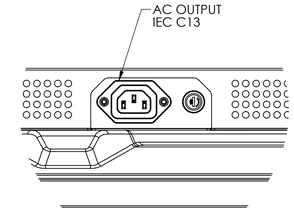

DETAIL D
SCALE 1 : 2

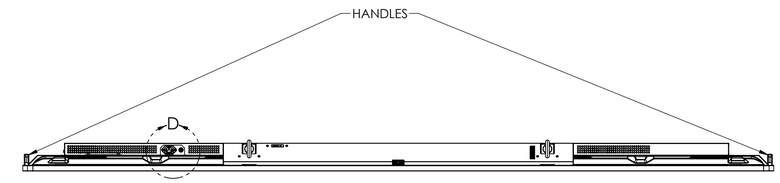

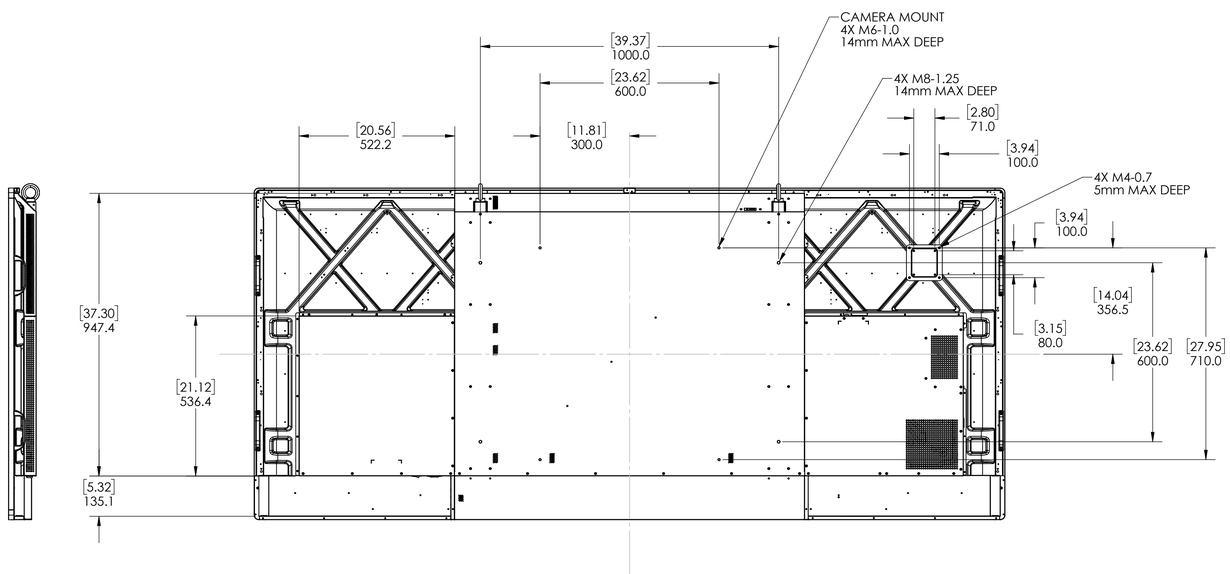

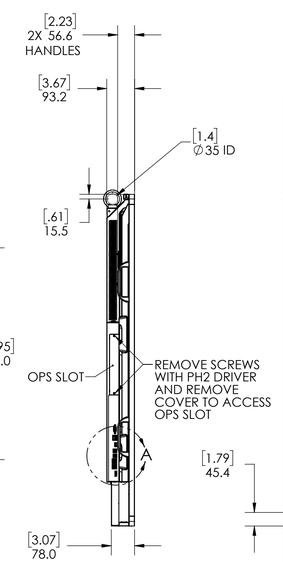

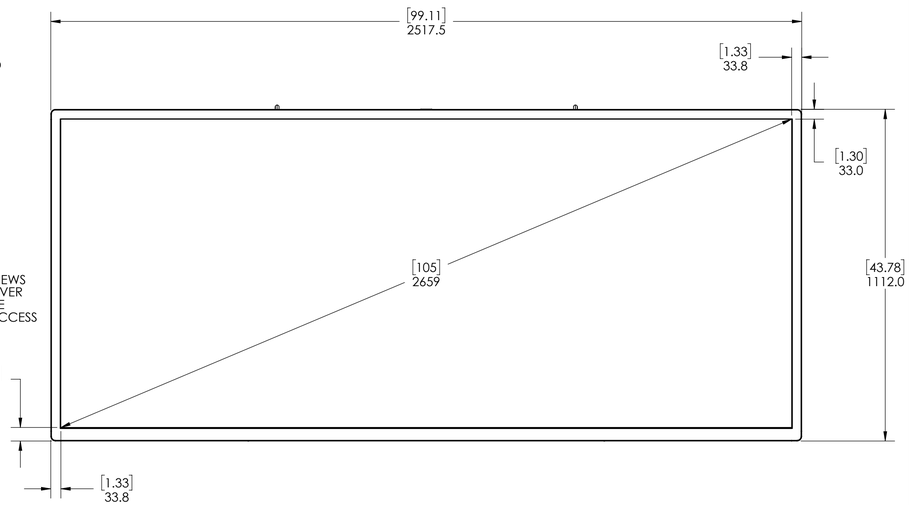

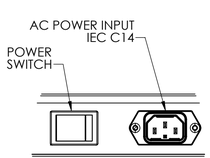

DETAIL C
SCALE 1 : 2

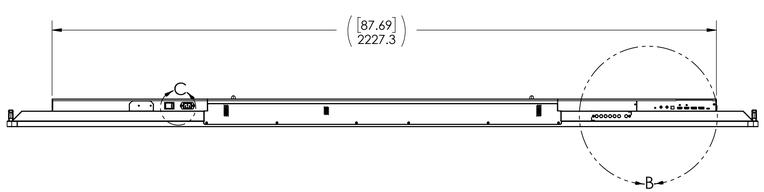

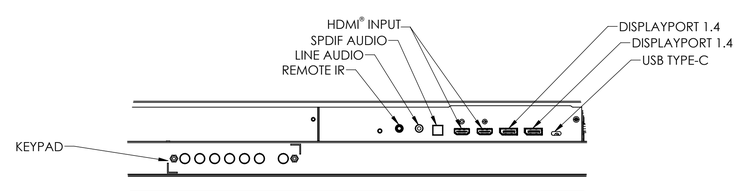

DETAIL B
SCALE 1 : 3

4. THE TERMS HDMI, HDMI HIGH-DEFINITION MULTIMEDIA INTERFACE, HDMI TRADE DRESS AND THE HDMI LOGOS ARE TRADEMARKS OR REGISTERED TRADEMARKS OF HDMI LICENSING ADMINISTRATOR, INC.
3. LIFTING EYEBOLTS REMOVABLE AFTER INSTALLATION.
2. KEEP PERFORATION AREAS CLEAR FOR VENTILATION.
1. SPECIFICATIONS SUBJECT TO CHANGE WITHOUT NOTICE.

NOTES: UNLESS OTHERWISE SPECIFIED

UNLESS OTHERWISE SPECIFIED DIMENSIONS ARE IN MILLIMETERS [INCHES].

TOLERANCES:

X= ±1 XX= ±.25

X= ±.5 ∠= ±1°

DIMENSIONING AND TOLERANCING PER ASME Y14.5M-1994

THIRD ANGLE PROJECTION

ENGR BY		11 Apr 23
DRAWN BY		
CHECKED BY		11 Apr 23
USED ON		
MATERIAL		
FINISH		

PLANAR

PLANAR SYSTEMS, INC.
1195 NE COMPTON DRIVE
HILLSBORO, OR 97006 USA

TITLE: URW105-ERO-T

SIZE	PART NO.	DRAWING NO.	REV
D	998-3425-01	998-3425-01	A

SCALE 1:10 DO NOT SCALE SHEET 1 OF 1

THIS DRAWING CONTAINS INFORMATION PROPRIETARY TO PLANAR SYSTEMS, INC., ANY REPRODUCTION IN PART OR WHOLE WITHOUT THE WRITTEN PERMISSION OF PLANAR SYSTEMS IS PROHIBITED. THIS DRAWING IS SUPPLIED FOR INFORMATION, IDENTIFICATION, ENGINEERING, EVALUATION, AND/OR INSPECTION PURPOSES ONLY AND MAY NOT BE USED AS BASIS FOR THE MANUFACTURING OF PRODUCTS OR THE FURNISHING OF SERVICES TO PLANAR SYSTEMS OR TO ANY THIRD PARTY UNLESS AUTHORIZED IN WRITING BY PLANAR SYSTEMS.